ELEX212 Electronic Principles 1

KCL AND KVL

Laboratory Activity 1

Leader:

Date: _____ Rating: _____

Members:

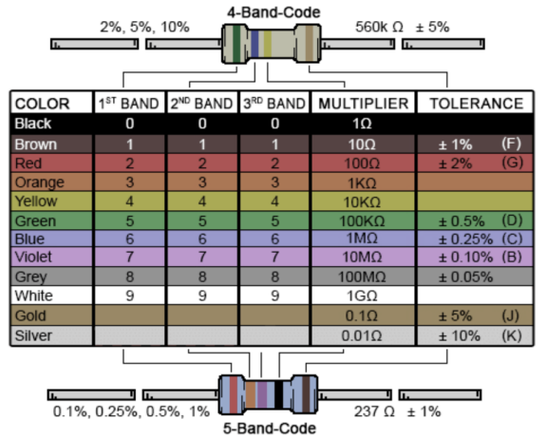

COLOR	1ST BAND	2ND BAND	3RD BAND	MULTIPLIER	TOLERANCE
Black	0	0	0	1Ω	
Brown	1	1	1	10Ω	± 1% (F)
Red	2	2	2	100Ω	± 2% (G)
Orange	3	3	3	1KΩ	
Yellow	4	4	4	10KΩ	
Green	5	5	5	100KΩ	± 0.5% (D)
Blue	6	6	6	1MΩ	± 0.25% (C)
Violet	7	7	7	10MΩ	± 0.10% (B)
Grey	8	8	8	100MΩ	± 0.05%
White	9	9	9	1GΩ	
Gold				0.1Ω	± 5% (J)
Silver				0.01Ω	± 10% (K)

EXERCISE 1 KCL/KVL METHOD

Step 1 **Label** the variables and **set-up** the given circuit

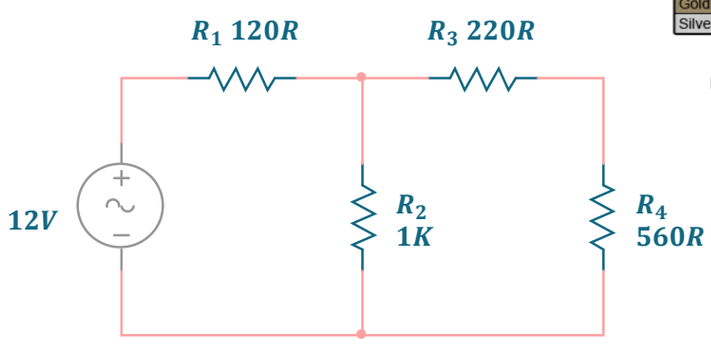

Step 2 Measure the actual **resistance**

Resistor Value		
Resistor	Ideal	Actual
R_1		
R_2		
R_3		
R_4		

Step 3 Measure the **voltage**

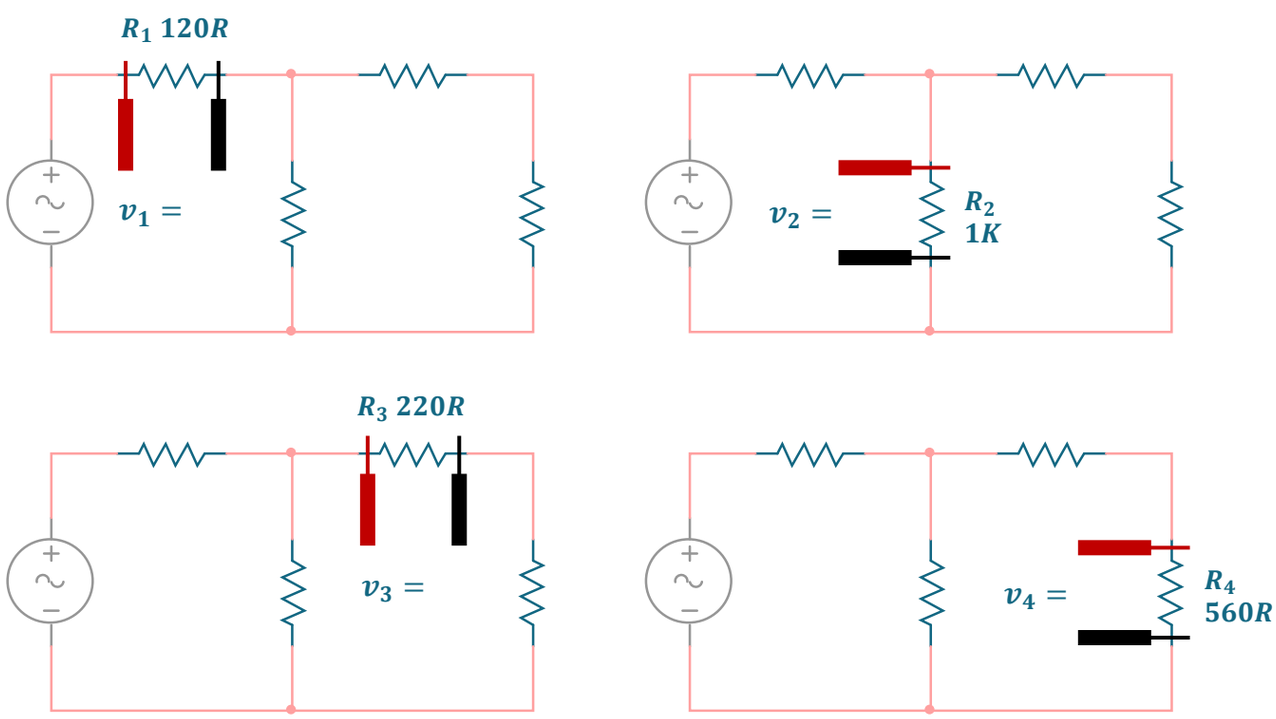

Step 4 Measure the **current**

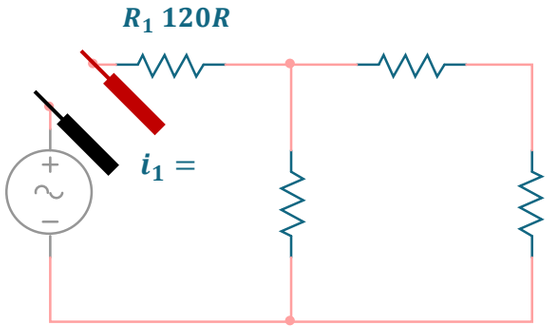

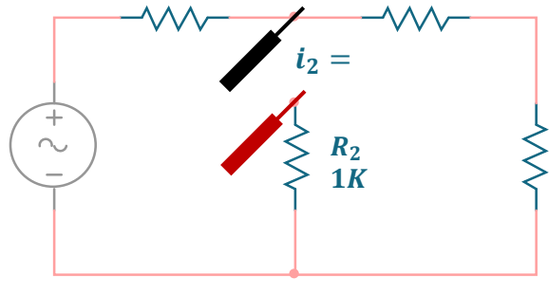

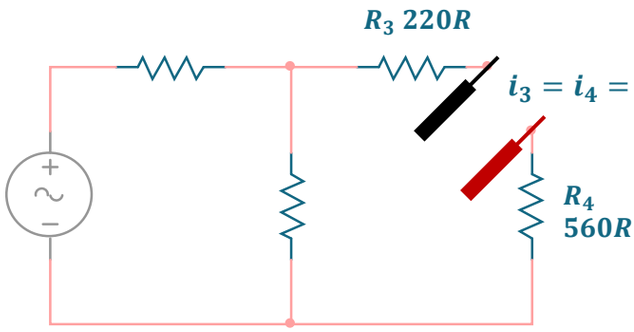

Step 5 Record the **parameter** response on the given table

Parameter	Simulation	Actual	% Error
v_1			
v_2			
v_3			
i_1			
i_2			
i_3			

Step 6 Check the results using **KCL/KVL** method

Conclusion: